NGA-PRO
NGA

Pumps with open impeller

NGA-PRO

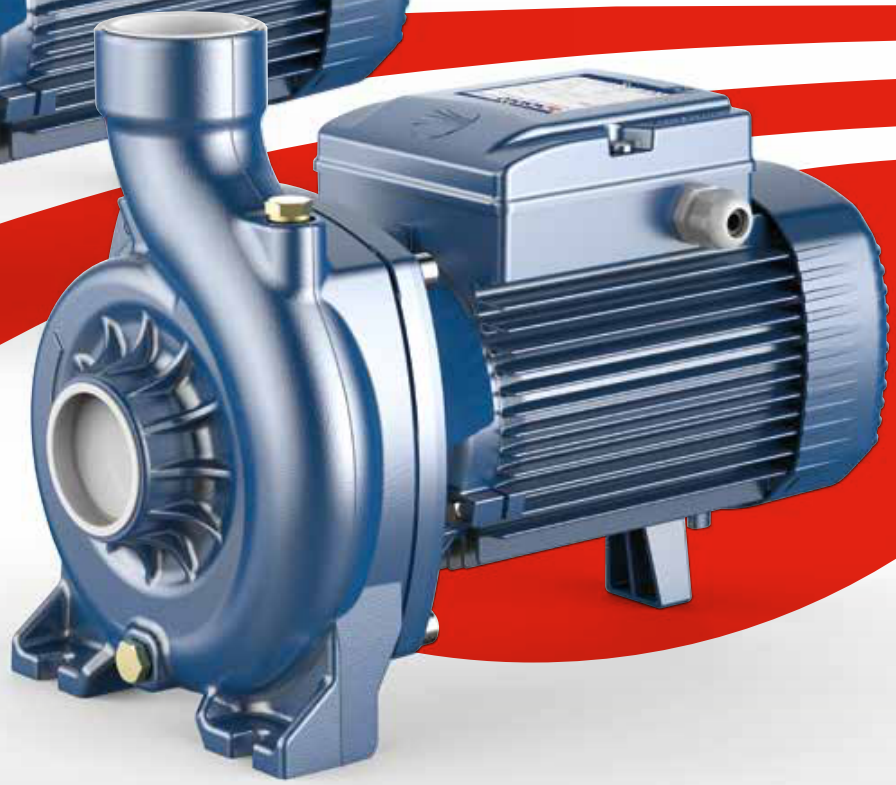

NGA

MADE IN ITALY

PEDROLLO®
the spring of life

NGA

Cast iron pumps with open impeller

Clean water
Domestic use
Agricultural use
Industrial use

High performance

The great efficiencies achieved by the hydraulics with open radial flow impeller are the result of advanced fluid dynamic design, which combined with a mechanical design using structural calculation software make the **NGA** robust and compact, guaranteeing a long service life. The newly developed electric motor, designed to also work with inverters, has a balanced operation with low noise.

Materials

The high-performance JL250 cast iron combined with a cataphoretic surface treatment protects the pump from wear and corrosion.

PERFORMANCE RANGE

- Flow rate up to **900 l/min** (54 m^3/h)
- Head up to **20.5 m**

APPLICATION LIMITS

- Manometric suction lift up to **7 m**
- Liquid temperature from **-10 °C** to **+90 °C**
- Ambient temperature from **-10 °C** to **+40 °C**
- Max working pressure in pump body
  6 bar NGA 1 - NGA 2
  10 bar NGA 3
- Continuous service **S1**

Passage of suspended solids up to

- **Ø 12 mm** for **NGA 1 - NGA 2**
- **Ø 20 mm** for **NGA 3**

INSTALLATION AND USE

Suitable for pumping clean water and liquids that are not chemically aggressive for the materials from which the pump is made.
The open impeller design allows **liquids containing relatively high levels of impurities** to be pumped without the risk of the impeller clogging. **NGA** pumps are particularly suitable for pumping liquids that are not completely clean, guaranteeing the passage of solids up to 20 mm and therefore applications such as: transfers from canals, rivers, reservoirs, tanks, etc.
The pump should be installed in an enclosed environment, or any way sheltered from inclement weather.

OPTIONS AVAILABLE ON REQUEST

- Special mechanical seal
- Pump body with threaded ports NPT ANSI B 1.20.1
- Other voltages or a 60 Hz frequency
- Supply of ISO 228/1 flanges for intake and delivery ports in AISI 316 stainless steel.

- On request up to 110° C

WARRANTY

2 years in accordance with our general conditions of sale

COMPANY WITH QUALITY SYSTEM CERTIFIED BY DNV GL = ISO 9001 =

NGA

Cast iron pumps with open impeller

PEDROLLO® the spring of life

CHARACTERISTIC CURVES AND PERFORMANCE DATA

50 Hz n= 2900 min⁻¹ HS= 0 m

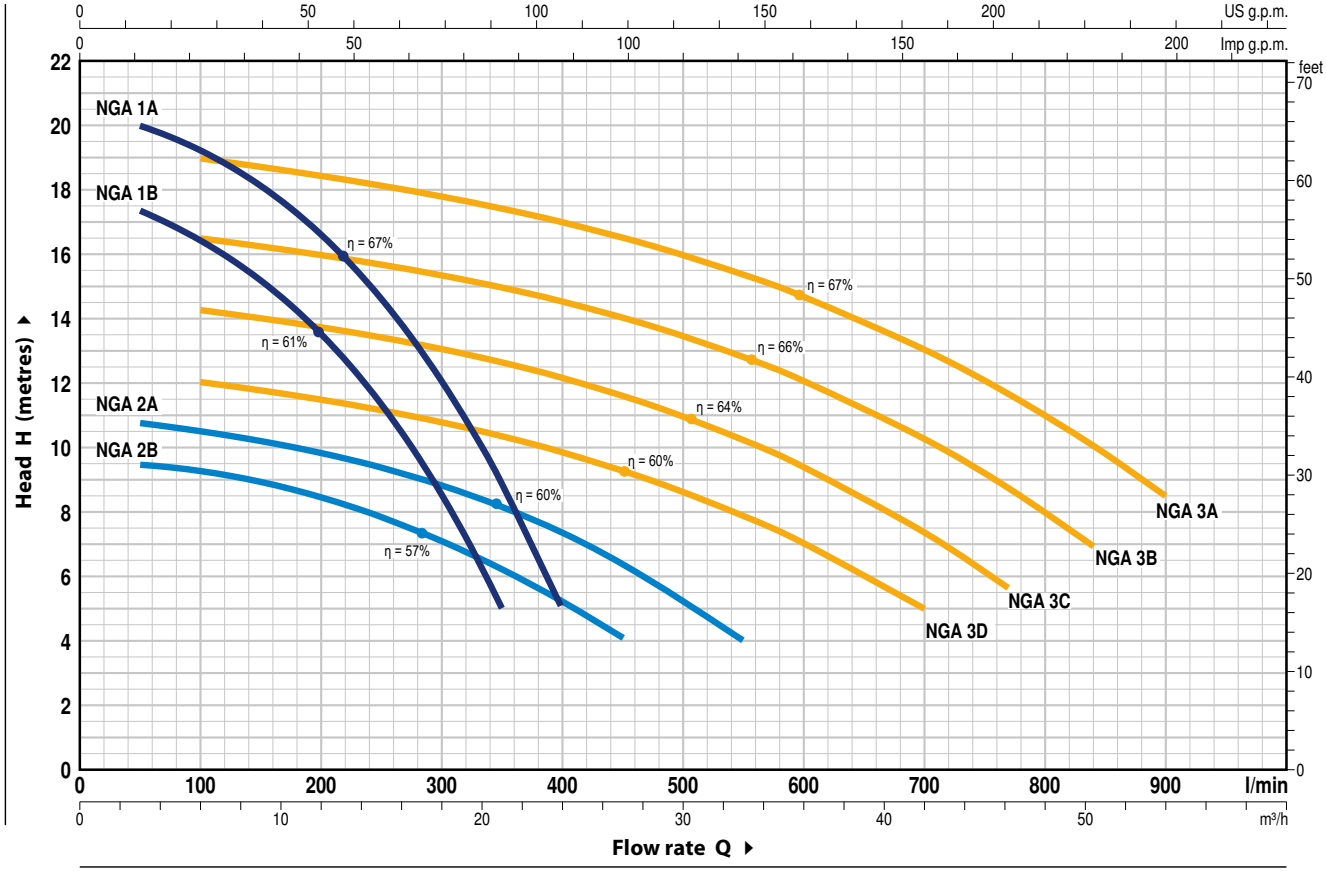

MODEL		POWER (P2)			Q m³/h	0	3	6	9	12	15	18	21	24
Single-phase	**Three-phase**	**kW**	**HP**	▲	Q l/min	**0**	**50**	**100**	**150**	**200**	**250**	**300**	**350**	**400**
NGAm 1B	**NGA 1B**	0.55	0.75	**IE3**	**H** metres	18	17.4	16.4	15.2	13.5	11.3	8.7	5	
NGAm 1A	**NGA 1A**	0.75	1			20.5	20	19.3	18.1	16.6	14.7	12.1	9	5

MODEL		POWER (P2)			Q m³/h	0	3	6	12	18	24	27	33	42	46.2	50.4	54
Single-phase	**Three-phase**	**kW**	**HP**	▲	Q l/min	**0**	**50**	**100**	**200**	**300**	**400**	**450**	**550**	**700**	**770**	**840**	**900**
NGAm 2B	**NGA 2B**	0.55	0.75	**IE3**	**H** metres	9.5	9.4	9.3	8.4	7	5.2	4					
NGAm 2A	**NGA 2A**	0.75	1			11	10.8	10.5	9.8	8.8	7.4	6.4	4				
NGAm 3D	**NGA 3D**	1.1	1.5			12.5	–	12	11.5	10.8	9.8	9.3	7.8	5			
NGAm 3C	**NGA 3C**	1.5	2			14.8	–	14.4	13.8	13.1	12.2	11.7	10.3	7.4	5.7		
NGAm 3B	**NGA 3B**	1.8	2.5			17	–	16.5	16	15.3	14.5	14	12.8	10.3	8.8	7	
NGAm 3A	**NGA 3A**	2.2	3			19.5	–	19	18.4	17.8	17	16.5	15.4	13	11.5	10	8.5

Q = Flow rate **H** = Total manometric head **HS** = Suction height

▲ Three-phase motor efficiency class (IEC 60034-30-1)

Tolerance of characteristic curves in compliance with EN ISO 9906 Grade 3B.

NGA-PRO

Stainless steel pumps with open impeller

Clean water
Agricultural use
Industrial use

High performance

The great efficiencies achieved by the hydraulics with open radial flow impeller are the result of advanced fluid dynamic design, which combined with mechanical design using structural calculation software make the **NGA-PRO** robust and compact, guaranteeing a long service life. The newly developed electric motor, designed to also work with inverters, has a balanced operation with low noise.

Materials

The high-performance AISI 316 steel that characterises the entire hydraulic structure is particularly suitable for pumping moderately aggressive liquids with suspended solids.

PERFORMANCE RANGE

- Flow rate up to **900 l/min** (54 m^3/h)
- Head up to **20.5 m**

APPLICATION LIMITS

- Manometric suction lift up to **7 m**
- Liquid temperature from **-10 °C** to **+90 °C**
- Ambient temperature from **-10 °C** to **+40 °C**
- Max working pressure in pump body
  6 bar NGA 1-PRO - NGA 2- PRO
  10 bar NGA 3-PRO
- Continuous service **S1**

Passage of suspended solids up to

- **Ø 12 mm** for **NGA 1-PRO - NGA 2-PRO**
- **Ø 20 mm** for **NGA 3-PRO**

INSTALLATION AND USE

Suitable for pumping clean water and liquids that are not chemically aggressive for the materials from which the pump is made.
The open impeller design allows **liquids containing relatively high levels of impurities** to be pumped without the risk of the impeller clogging. All of the components in contact with the pumped liquid are constructed in **AISI 316 stainless steel**.
NGA-PRO pumps are particularly suitable for pumping liquids that are not completely clean, guaranteeing the passage of solids up to 20 mm and therefore applications such as: washing, circulation of cooling liquids, tanks etc.
The pump should be installed in an enclosed environment, or any way sheltered from inclement weather.

OPTIONS AVAILABLE ON REQUEST

- Special mechanical seal
- Standardised mechanical seal with anti-rotation (NGA 3-PRO)
- Pump body with threaded ports NPT ANSI B 1.20.1
- Other voltages or a 60 Hz frequency
- Supply of ISO 228/1 flanges for intake and delivery ports in AISI 316 stainless steel

- On request up to 110° C

WARRANTY

2 years in accordance with our general conditions of sale

COMPANY WITH QUALITY SYSTEM CERTIFIED BY DNV GL = ISO 9001 =

NGA-PRO

Stainless steel pumps with open impeller

PEDROLLO® the spring of life

CHARACTERISTIC CURVES AND PERFORMANCE DATA

50 Hz **n= 2900 min⁻¹** HS= 0 m

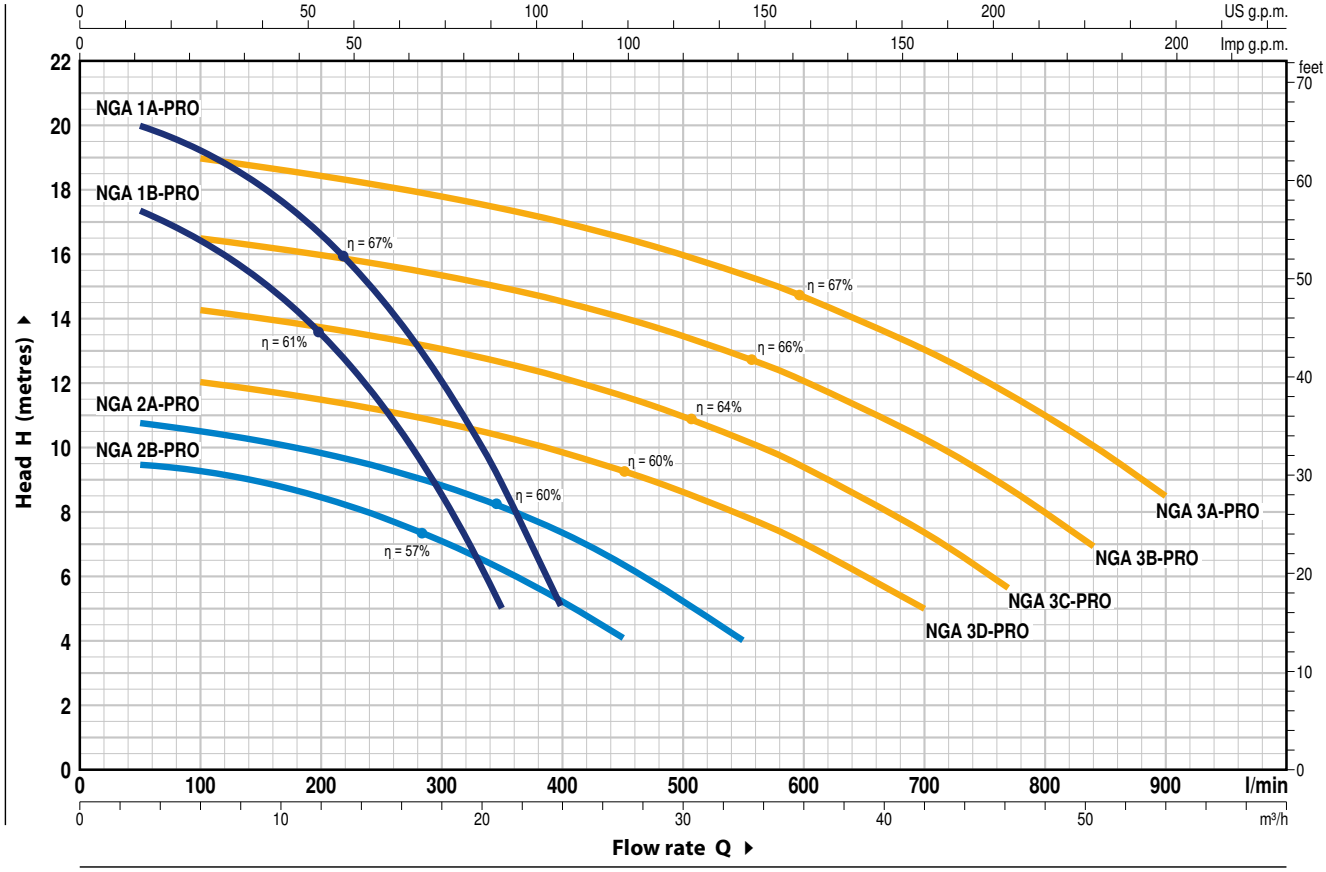

MODEL		POWER (P2)			Q m³/h	0	3	6	9	12	15	18	21	24
Single-phase	**Three-phase**	**kW**	**HP**	▲	Q l/min	**0**	**50**	**100**	**150**	**200**	**250**	**300**	**350**	**400**
NGAm 1B - PRO	**NGA 1B - PRO**	0.55	0.75	**IE3**	**H** metres	18	17.4	16.4	15.2	13.5	11.3	8.7	5	
NGAm 1A - PRO	**NGA 1A - PRO**	0.75	1			20.5	20	19.3	18.1	16.6	14.7	12.1	9	5

MODEL		POWER (P2)			Q m³/h	0	3	6	12	18	24	27	33	42	46.2	50.4	54
Single-phase	**Three-phase**	**kW**	**HP**	▲	Q l/min	**0**	**50**	**100**	**200**	**300**	**400**	**450**	**550**	**700**	**770**	**840**	**900**
NGAm 2B - PRO	**NGA 2B - PRO**	0.55	0.75	**IE3**	**H** metres	9.5	9.4	9.3	8.4	7	5.2	4					
NGAm 2A - PRO	**NGA 2A - PRO**	0.75	1			11	10.8	10.5	9.8	8.8	7.4	6.4	4				
NGAm 3D - PRO	**NGA 3D - PRO**	1.1	1.5			12.5	–	12	11.5	10.8	9.8	9.3	7.8	5			
NGAm 3C - PRO	**NGA 3C - PRO**	1.5	2			14.8	–	14.4	13.8	13.1	12.2	11.7	10.3	7.4	5.7		
NGAm 3B - PRO	**NGA 3B - PRO**	1.8	2.5			17	–	16.5	16	15.3	14.5	14	12.8	10.3	8.8	7	
NGAm 3A - PRO	**NGA 3A - PRO**	2.2	3			19.5	–	19	18.4	17.8	17	16.5	15.4	13	11.5	10	8.5

Q = Flow rate **H** = Total manometric head **HS** = Suction height

▲ Three-phase motor efficiency class (IEC 60034-30-1)

Tolerance of characteristic curves in compliance with EN ISO 9906 Grade 3B.

NGA

Cast iron pumps with open impeller

PEDROLLO® the spring of life

POS.	COMPONENT	CONSTRUCTION CHARACTERISTICS
1	**PUMP BODY**	JL 250 cast iron with an Epoxy Electro Coating treatment, with threaded ports in compliance with ISO 228/1
2	**BODY BACKPLATE**	JL 200 cast iron for **NGA3**, stainless steel AISI 304 for **NGA1**, **NGA2**
3	**IMPELLER**	Open impeller in JL 250 cast iron with an Epoxy Electro Coating treatment
4	**MOTOR SHAFT**	AISI 431 stainless steel

5 MECHANICAL SEAL

Pump	*Seal*	*Shaft*	*Materials*			
Model	***Model***	***Diameter***	*Stationary ring*	*Rotational ring*	*Elastomer*	*Spring*
NGA 1, NGA 2	**AR-14**	**Ø 14** mm	Graphite	Ceramic	NBR	AISI 316
NGA 3	**FN-18**	**Ø 18** mm	Graphite	Ceramic	NBR	AISI 316

6 BEARINGS

Pump	*Model*
NGA 1, NGA 2	**6203 ZZ / 6203 ZZ**
NGA 3	**6204 ZZ / 6204 ZZ**

7 CAPACITOR

8 ELECTRIC MOTOR

NGAm: single-phase 230 V - 50 Hz with termal overload protector incorporated into the winding
NGA: three-phase 230/400 V - 50 Hz.

➠ **The three-phase pumps are fitted with high performance motors in class IE3 (IEC 60034-30-1)**

– Insulation: class F
– Protection: IP X4 (NGA 1/2) - IP X5 (NGA 3)

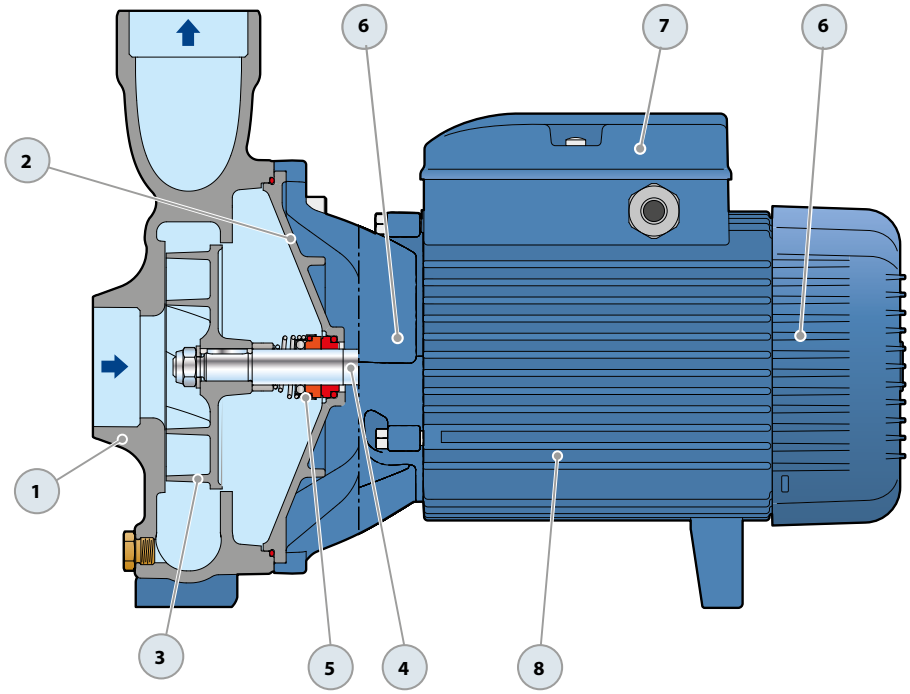

NGA-PRO

Stainless steel pumps with open impeller

POS.	COMPONENT	CONSTRUCTION CHARACTERISTICS
1	**PUMP BODY**	AISI 316 stainless steel complete with threaded ports in compliance with ISO 228/1
2	**BODY BACKPLATE**	AISI 316 stainless steel
3	**IMPELLER**	Open impeller in AISI 316 stainless steel
4	**MOTOR SHAFT**	AISI 316L stainless steel

5 MECHANICAL SEAL

Pump	*Seal*	*Shaft*	*Materials*			
Model	***Model***	***Diameter***	*Stationary ring*	*Rotational ring*	*Elastomer*	*Spring*
NGA 1-PRO, NGA 2-PRO	**AR-14S**	**Ø 14** mm	Graphite	Ceramic	Viton	AISI 316
NGA 3-PRO	**FN-18 V6**	**Ø 18** mm	Graphite	Ceramic	Viton	AISI 316

6 BEARINGS

Pump	*Model*
NGA 1-PRO, NGA 2-PRO	**6203 ZZ / 6203 ZZ**
NGA 3-PRO	**6204 ZZ / 6204 ZZ**

7 CAPACITOR

8 ELECTRIC MOTOR

NGAm-PRO: single-phase 230 V - 50 Hz with termal overload protector incorporated into the winding
NGA-PRO: three-phase 230/400 V - 50 Hz.

➠ **The three-phase pumps are fitted with high performance motors in class IE3 (IEC 60034-30-1)**

– Insulation: class F
– Protection: IP X4 (NGA 1/2-PRO) - IP X5 (NGA 3-PRO)

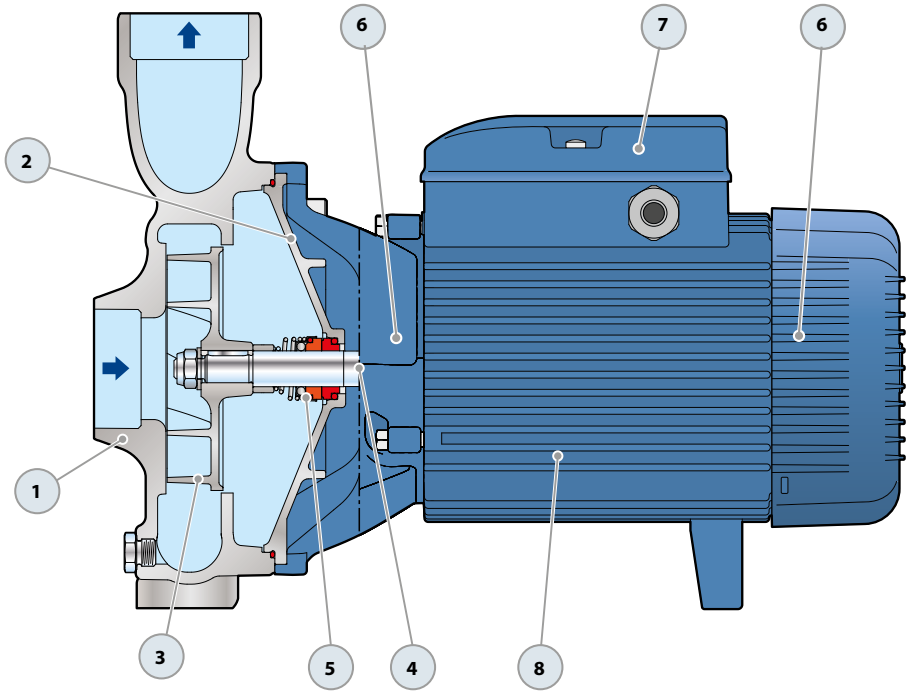

NGA

Cast iron pumps with open impeller

DIMENSIONS AND WEIGHTS

WITH THREADED PORTS

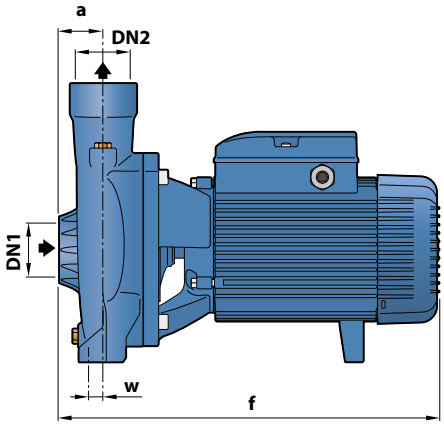

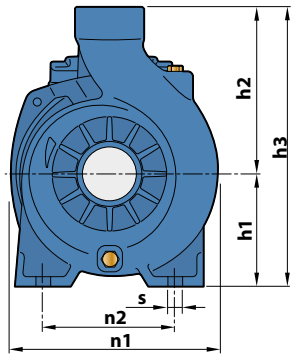

MODEL		PORTS		DIMENSIONS mm									kg	
Single-phase	Three-phase	DN1	DN2	a	f	h1	h2	h3	n1	n2	w	s	1~	3~
NGAm 1B	NGA 1B	1½"	1½"	40	299	92	135	227	190	160	6	11	12.5	12.5
NGAm1A	NGA 1A												12.7	12.7
NGAm 2B	NGA 2B			32									12.9	12.9
NGAm 2A	NGA 2A												13.1	13.1
NGAm 3D	NGA 3D	2"	2"	48	387	120	178	298	217	140	18	11.5	21.4	22.2
NGAm 3C	NGA 3C												23.1	23.1
NGAm 3B	NGA 3B				407								25.7	25.7
NGAm 3A	NGA 3A												25.7	25.7

WITH FLANGED PORTS

MODEL		PORTS		DIMENSIONS mm				
Single-phase	Three-phase	DN1	DN2	a	f	h1	h2	h3
NGAm 1B	NGA 1B	40	40	60	334	92	156	248
NGAm1A	NGA 1A							
NGAm 2B	NGA 2B			52	342			
NGAm 2A	NGA 2A							
NGAm 3D	NGA 3D	50	50	70	408	120	200	320
NGAm 3C	NGA 3C							
NGAm 3B	NGA 3B				428			
NGAm 3A	NGA 3A							

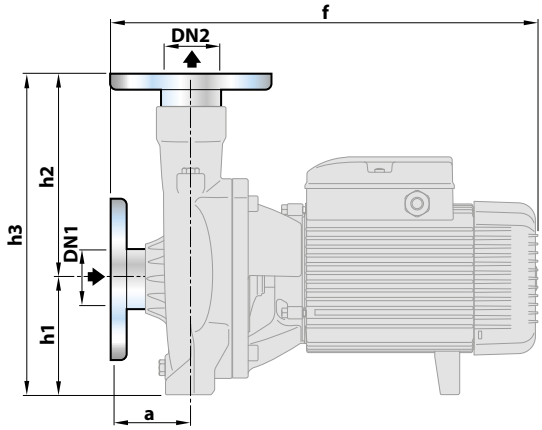

FLANGES	D	K	F	HOLES	
DN	mm	mm	mm	N°	Ø (mm)
40	150	110	78	4	18
50	165	125	99	4	18

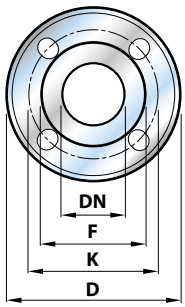

NGA-PRO

Stainless steel pumps with open impeller

DIMENSIONS AND WEIGHTS

WITH THREADED PORTS

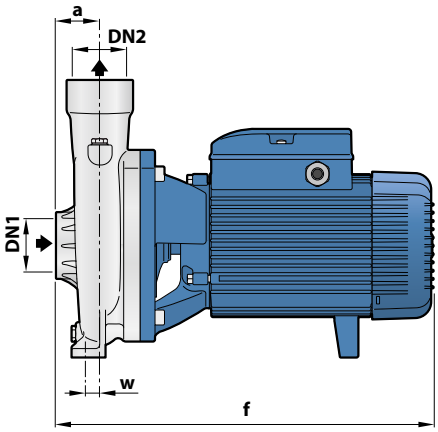

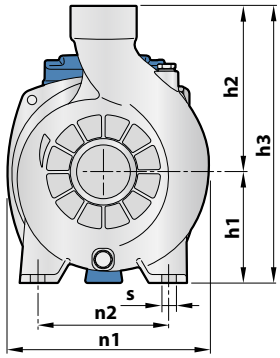

MODEL		PORTS		DIMENSIONS mm									kg	
Single-phase	Three-phase	DN1	DN2	a	f	h1	h2	h3	n1	n2	w	s	1~	3~
NGAm 1B - PRO	NGA 1B - PRO	1½"	1½"	40	299	92	135	227	190	160	6	11	12.9	12.7
NGAm1A - PRO	NGA 1A - PRO												13.1	13.0
NGAm 2B - PRO	NGA 2B - PRO			32									13.2	13.0
NGAm 2A - PRO	NGA 2A - PRO												13.4	13.3
NGAm 3D - PRO	NGA 3D - PRO	2"	2"	48	387	120	178	298	217	140	18	11.5	20.2	21.0
NGAm 3C-- PRO	NGA 3C - PRO												21.9	21.9
NGAm 3B - PRO	NGA 3B - PRO				407								24.5	24.5
NGAm 3A - PRO	NGA 3A - PRO												24.5	24.5

WITH FLANGED PORTS

MODEL		PORTS		DIMENSIONS mm				
Single-phase	Three-phase	DN1	DN2	a	f	h1	h2	h3
NGAm 1B - PRO	NGA 1B - PRO	40	40	60	334	92	156	248
NGAm1A - PRO	NGA 1A - PRO							
NGAm 2B - PRO	NGA 2B - PRO			52	342			
NGAm 2A - PRO	NGA 2A - PRO							
NGAm 3D - PRO	NGA 3D - PRO	50	50	70	408	120	200	320
NGAm 3C - PRO	NGA 3C - PRO							
NGAm 3B - PRO	NGA 3B - PRO				428			
NGAm 3A - PRO	NGA 3A - PRO							

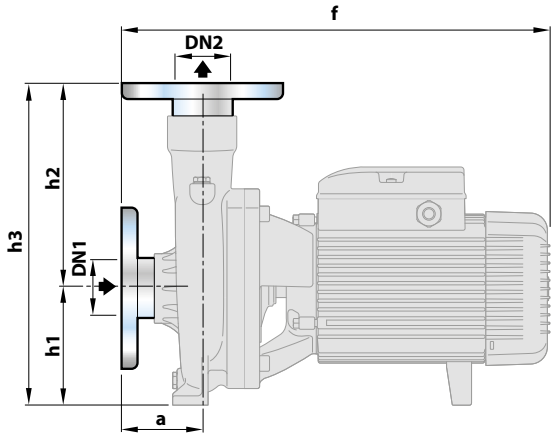

FLANGES	D	K	F	HOLES	
DN	mm	mm	mm	N°	Ø (mm)
40	150	110	78	4	18
50	165	125	99	4	18

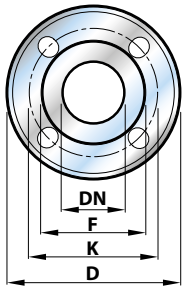

NGA
NGA-PRO

PEDROLLO®
the spring of life

ABSORPTION

MODEL	VOLTAGE	
Single-phase	230 V	240 V
NGAm 1B	5.6 A	5.1 A
NGAm1A	6.2 A	5.9 A
NGAm 2B	4.2 A	4.1 A
NGAm 2A	4.6 A	4.4 A
NGAm 3D	7.5 A	7.2 A
NGAm 3C	9.0 A	8.6 A
NGAm 3B	10.5 A	10.1 A
NGAm 3A	12.5 A	12.0 A

MODEL	VOLTAGE					
Three-phase	230 V	400 V	690 V	240 V	415 V	720 V
NGA 1B	3.5 A	2.0 A	1.2 A	3.3 A	1.9 A	1.1 A
NGA 1A	4.0 A	2.3 A	1.3 A	3.8 A	2.2 A	1.3 A
NGA 2B	3.3 A	1.9 A	1.1 A	3.2 A	1.8 A	1.1 A
NGA 2A	3.8 A	2.2 A	1.3 A	3.7 A	2.1 A	1.2 A
NGA 3D	5.0 A	2.9 A	1.7 A	4.8 A	2.8 A	1.6 A
NGA 3C	6.1 A	3.5 A	2.0 A	5.8 A	3.4 A	1.9 A
NGA 3B	7.4 A	4.3 A	2.5 A	7.1 A	4.1 A	2.4 A
NGA 3A	8.3 A	4.8 A	2.8 A	8.0 A	4.6 A	2.7 A

CAPACITOR

MODEL	CAPACITANCE
Single-phase	(230 V o 240 V)
NGAm 1B	16 µF - 450 VL
NGAm1A	20 µF - 450 VL
NGAm 2B	16 µF - 450 VL
NGAm 2A	20 µF - 450 VL
NGAm 3D	31.5 µF - 450 VL
NGAm 3C	45 µF - 450 VL
NGAm 3B	50 µF - 450 VL
NGAm 3A	50 µF - 450 VL

ABSORPTION

MODEL	VOLTAGE	
Single-phase	230 V	240 V
NGAm 1B - PRO	5.6 A	5.1 A
NGAm1A - PRO	6.2 A	5.9 A
NGAm 2B - PRO	4.2 A	4.1 A
NGAm 2A - PRO	4.6 A	4.4 A
NGAm 3D - PRO	7.5 A	7.2 A
NGAm 3C - PRO	9.0 A	8.6 A
NGAm 3B - PRO	10.5 A	10.1 A
NGAm 3A - PRO	12.5 A	12.0 A

MODEL	VOLTAGE					
Three-phase	230 V	400 V	690 V	240 V	415 V	720 V
NGA 1B - PRO	3.5 A	2.0 A	1.2 A	3.3 A	1.9 A	1.1 A
NGA 1A - PRO	4.0 A	2.3 A	1.3 A	3.8 A	2.2 A	1.3 A
NGA 2B - PRO	3.3 A	1.9 A	1.1 A	3.2 A	1.8 A	1.1 A
NGA 2A - PRO	3.8 A	2.2 A	1.3 A	3.7 A	2.1 A	1.2 A
NGA 3D - PRO	5.0 A	2.9 A	1.7 A	4.8 A	2.8 A	1.6 A
NGA 3C - PRO	6.1 A	3.5 A	2.0 A	5.8 A	3.4 A	1.9 A
NGA 3B - PRO	7.4 A	4.3 A	2.5 A	7.1 A	4.1 A	2.4 A
NGA 3A - PRO	8.3 A	4.8 A	2.8 A	8.0 A	4.6 A	2.7 A

CAPACITOR

MODEL	CAPACITANCE
Single-phase	(230 V o 240 V)
NGAm 1B - PRO	16 µF - 450 VL
NGAm1A - PRO	20 µF - 450 VL
NGAm 2B - PRO	16 µF - 450 VL
NGAm 2A - PRO	20 µF - 450 VL
NGAm 3D - PRO	31.5 µF - 450 VL
NGAm 3C - PRO	45 µF - 450 VL
NGAm 3B - PRO	50 µF - 450 VL
NGAm 3A - PRO	50 µF - 450 VL

PEDROLLO®
the spring of life

NGA

NGA-PRO

The features and specifications here in stated are in no way binding for the manufacturer.
Pedrollo S.p.A. is free to modify the product at any time without previous notice.

Pedrollo S.p.A.
Via Enrico Fermi, 7 - 37047 San Bonifacio (Verona) Italy
tel. +39 045 6136311 - fax +39 045 7614663
vendite@pedrollo.com - sales@pedrollo.com - www.pedrollo.com

MADE IN ITALY

Z-DPL90072UK